PARTS MANUAL

NTC40A-QB

NEWHOLLAND T1530/ TC40

Front-End Loader

M13013
Printed 2013, 05, 29

Table of Contents
(NTC40A-QB)

Boom Assembly ---------- 2
Coupler Assembly ---------- 4
Bucket Assembly ---------- 6
Mounting Kit Assembly ---------- 8
Cylinder Assembly ---------- 10
Hydraulic Parts ---------- 12
Decal & Manual ---------- 14

BOOM ASSEMBLY

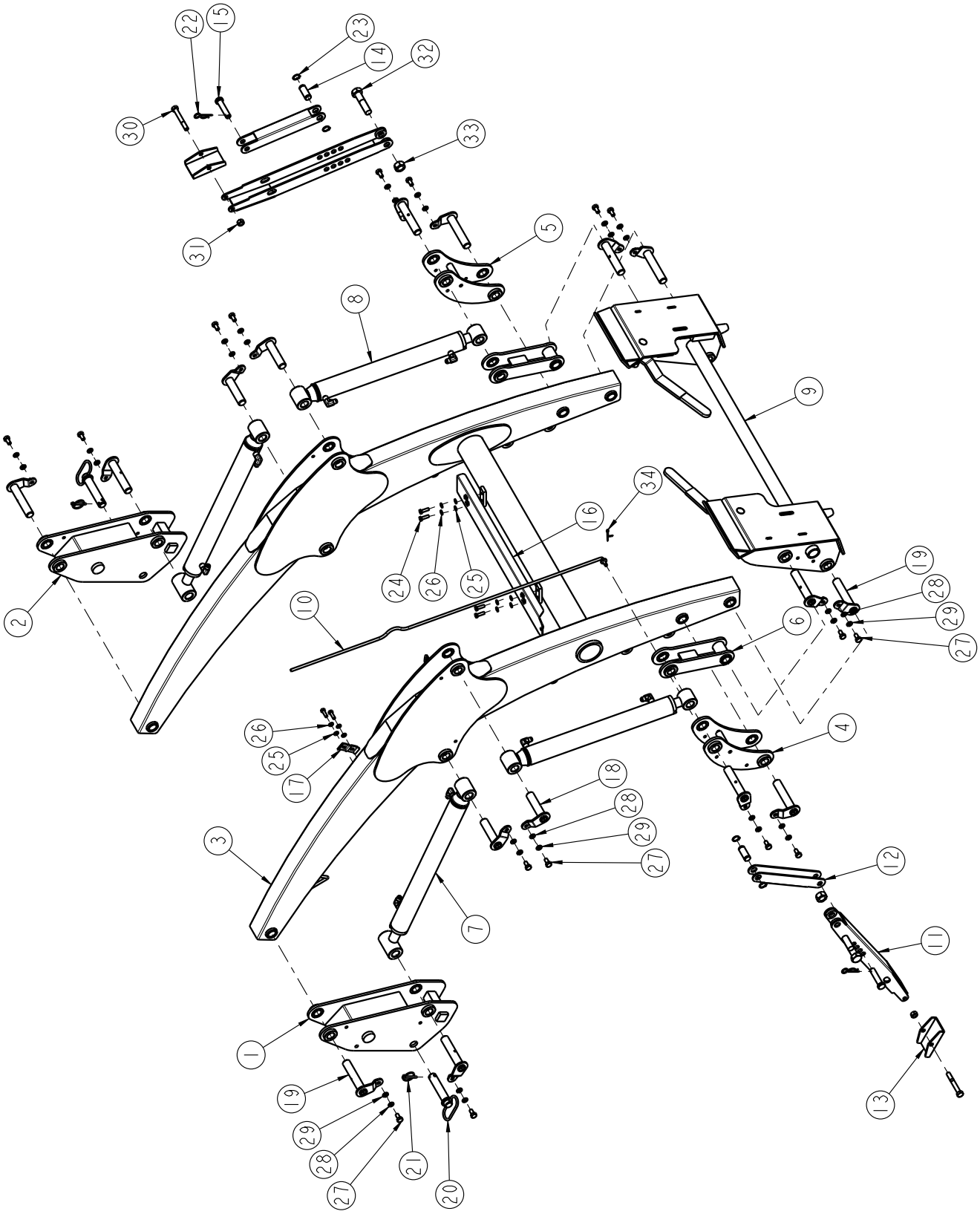

BOOM ASSEMBLY
(P/N: C1850A)

NO.	PART NUMBER	PART NAME	DESCRIPTION	Q'TY	REMARK
1	C1850A-3100	COLUMN, RH.		1	
2	C1850A-3200	COLUMN, LH.		1	
3	C1850A-0000	BOOM ASSY		1	
4	C1850B-6000	LINK BUCKET RH.		1	
5	C1850B-7000	LINK BUCKET LH.		1	
6	C1850A-4100	BUCKET ROD		2	
7	C1850A-8000	BOOM CYLINDER	Ø50xØ30x690LxST455	2	
8	C1850A-9000	BUCKET CYLINDER	Ø50xØ30x625LxST390	2	
9	B0945B-000B	COUPLER B/C		1	
10	2540A-450A	INDICATOR ASSY		1	
11	3045A-8100	STAND		2	
12	3045A-8200	BRACKET	4t	2	
13	4060A-8400	BRACKET	4t	2	
14	4060A-8520	PIN	Ø20x48L	2	
15	4060A-8530	PIN	Ø16x80L	2	
16	4060A-7010	COVER	2.3t	1	
17	ALN47-07-3100	COVER	4t	1	
18	P25A-105A	PIN	Ø25	4	
19	P25A-130A	PIN		12	
20	P25C-1030	PIN	Ø25	2	
21	AL20-98-9990	LINK PIN		2	
22	PR30045	R-PIN	Ø3	2	
23	SN20M	SNAP RING	Ø20	4	
24	BH0855125Z	BOLT	M8x25L	6	
25	WP08M	PLAIN WASHER	M8	6	
26	WS08M	SPRING WASHER	M8	6	
27	BH1044150Z	BOLT(10.9T)	M10x20L	16	
28	WP10M	PLAIN WASHER	M10	16	
29	WS10M	SPRING WASHER	M10	16	
30	BH1216175Z	BOLT(10.9T)	M12x90L	2	
31	NL12175Z	LOCK NUT	M12	2	
32	BH20H5250X	BOLT(10,9T)	M20x85L	2	
33	NL20250Z	LOCK NUT	M20	2	
34	PD03025	COTTER PIN	Ø3x25L	1	

COUPLER ASSEMBLY

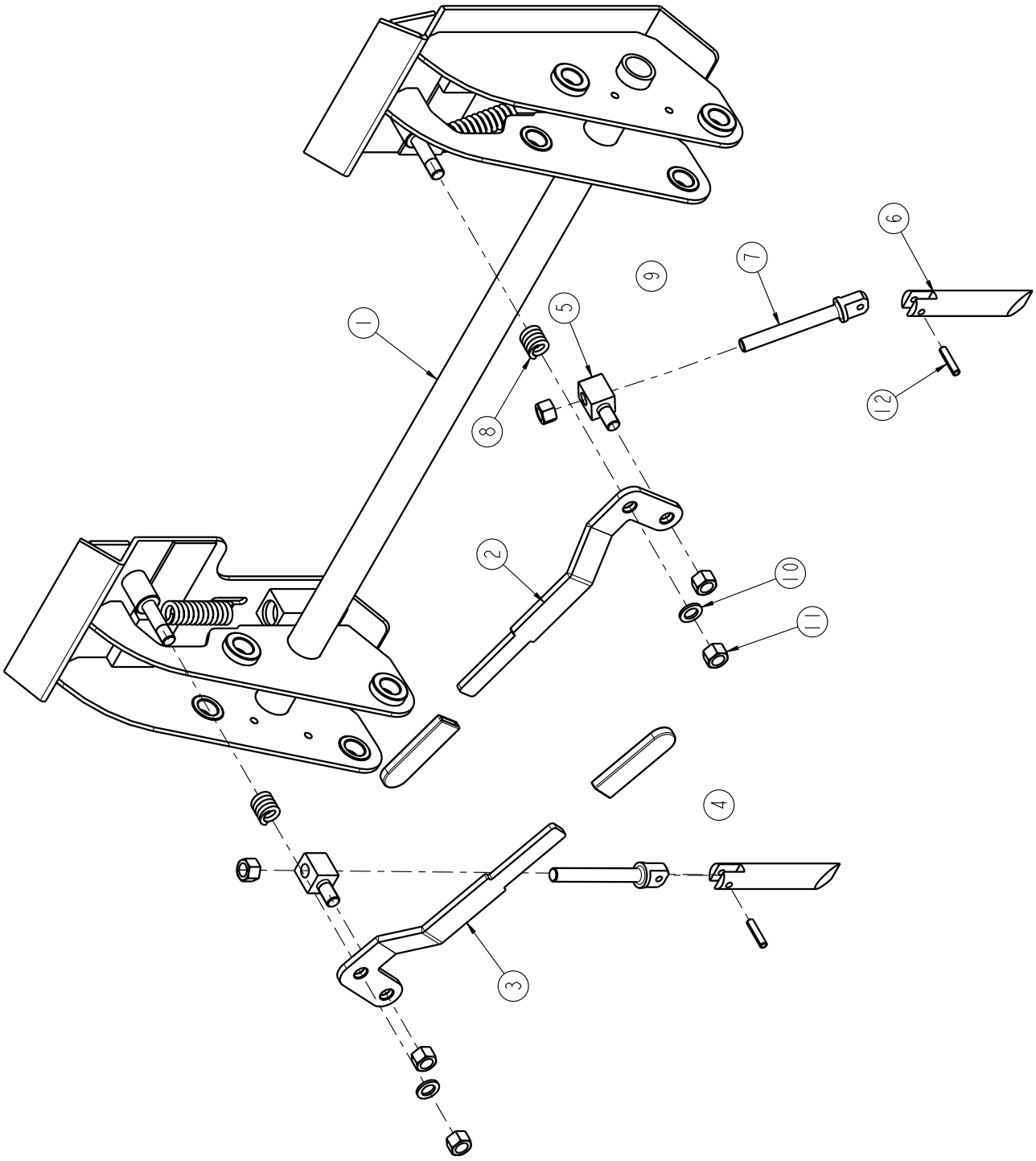

COUPLER ASSEMBLY
(P/N: B0945B-000B)

NO.	PART NUMBER	PART NAME	DESCRIPTION	Q'TY	REMARK
1	B0945B-200B	COUPLER B/C		1	
2	B0945A-111B	LEVER RH.	8t	1	
3	B0945A-112B	LEVER LH.	8t	1	
4	B0945A-0090	HANDLE		2	
5	B0945A-1210	PIN	30x30	2	
6	B0945A-1220	PIN	Ø30	2	
7	B0945A_1230	PIN	Ø30	2	
8	B0945A-1310	SPRING	Ø5	2	
9	B0945A-132A	SPRING		2	
10	WP16M	PLAIN WASHER	M16	2	
11	NL16200Z	LOCK NUT	M16	6	
12	PS08040	SPRING PIN	Ø8x40L	2	

BUCKET ASSEMBLY

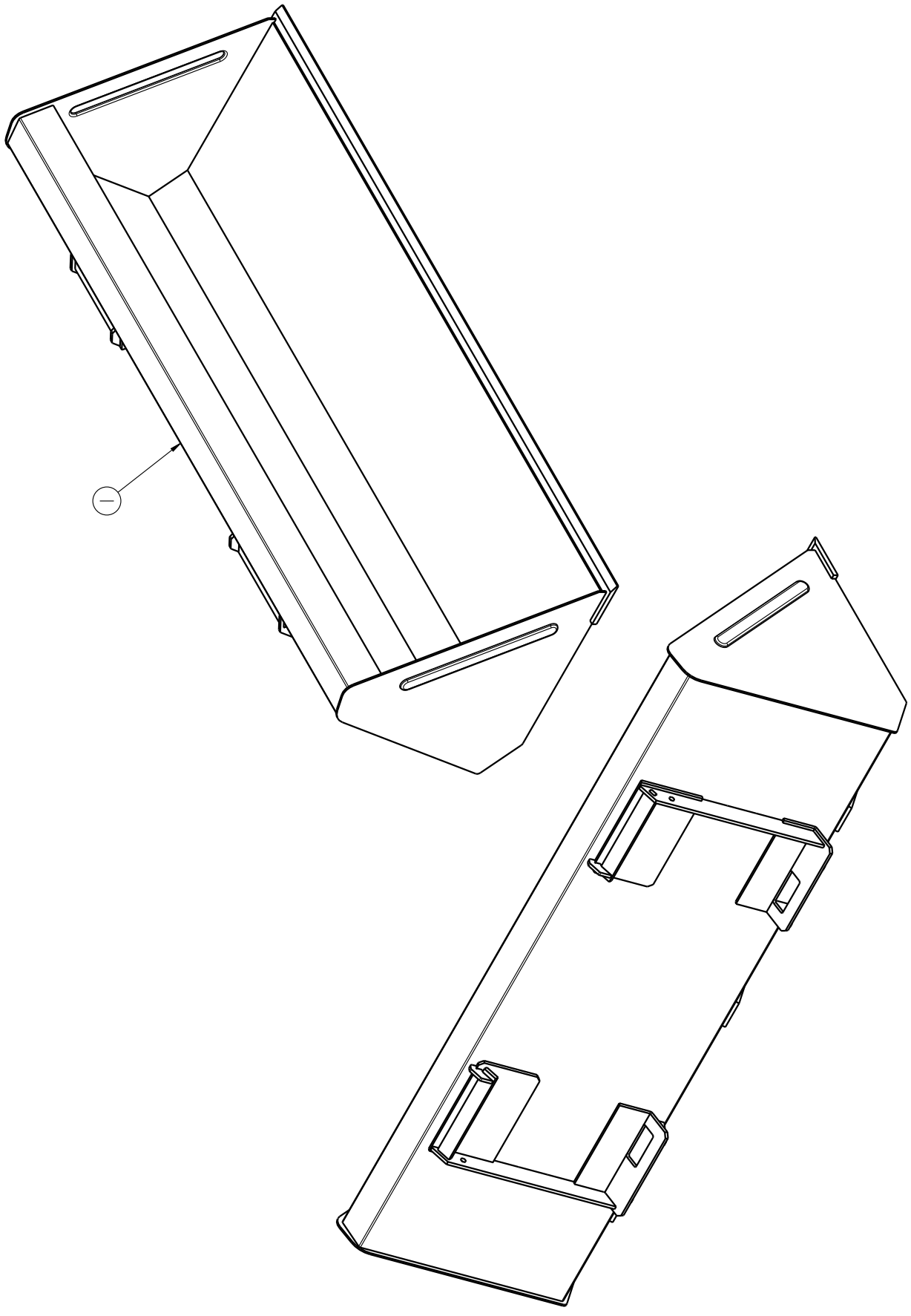

BUCKET ASSEMBLY
(P/N: AKU30-02-000D)

NO.	PART NUMBER	PART NAME	DESCRIPTION	Q'TY	REMARK
1	AKU30-02-000D	BUCKET	L=1830	1	

MOUNTING KIT

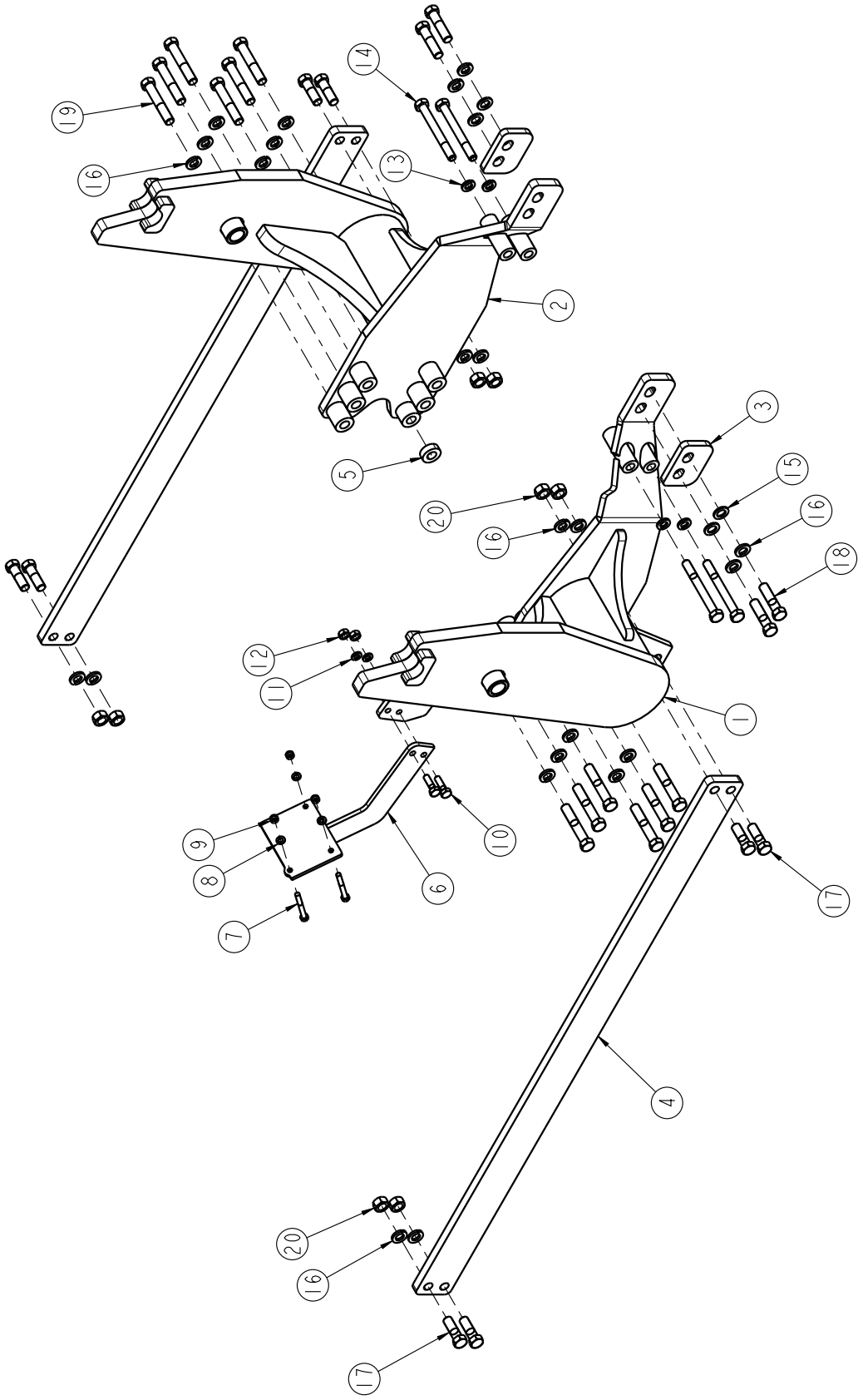

MOUNTING KIT
(P/N: TC40B)

NO.	PART NUMBER	PART NAME	DESCRIPTION	Q'TY	REMARK
1	TC40B-1100	SUB FRAME.RH		1	
2	TC40B-1200	SUB FRAME.LH		1	
3	TC40A-1310	BRACKET	12t	2	
4	TC40A-3100	BACK AXLE	16t	2	
5	TC40A-0010	SPACER	12t	2	
6	L2800B-8100	BRACKET-C/V		1	
7	BH08E6125Z	BOLT	M8x70L	3	
8	WS08M	SPRING WASHER	M8	3	
9	NH08125Z	NUT	M8	3	
10	BH1075150Z	BOLT(10.9T)	M10x35L	2	
11	WS10M	SPRING WASHER	M10	2	
12	NH10150Z	NUT	M10	2	
13	WS14M	SPRING WASHER	M14	4	
14	BH14Q7150Z	BOLT(10.9T)	M14x130Lx1.5P	4	
15	WP16M	PLAIN WASHER	M16	4	
16	WS16M	SPRING WASHER	M16	24	
17	BH16A6200Z	BOLT(10.9T)	M16x50L	8	
18	BH16D8200Z	BOLT(10.9T)	M16x65L	4	
19	BH1618200Z	BOLT(10.9T)	M16x90L	12	
20	NH16200Z	NUT	M16	8	

CYLINDER ASSEMBLY

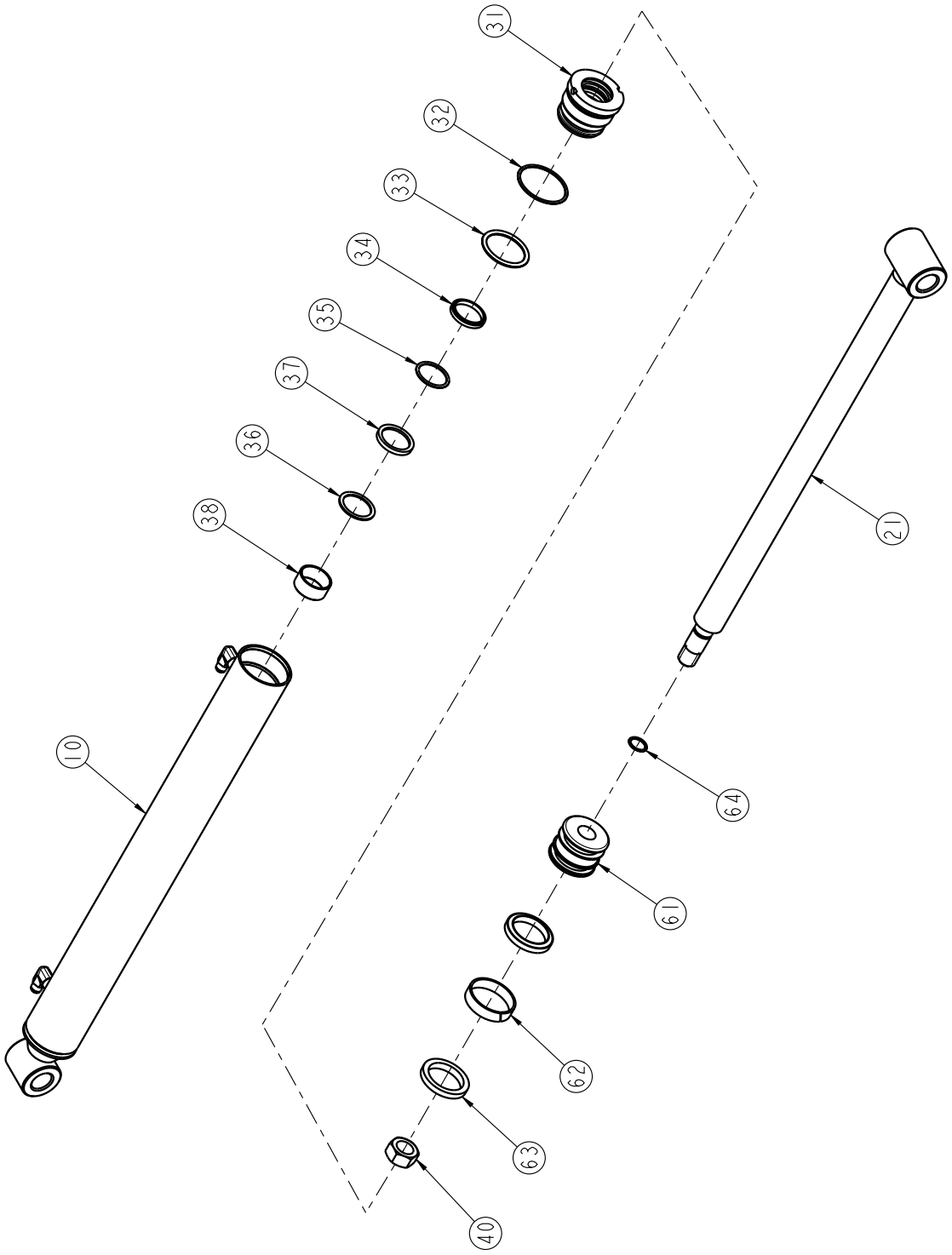

CYLINDER

CYLINDER ASSEMBLY

NO.	PART NAME	PART NUMBER		Q'TY	REMARK
		BUCKET (C1850A-9000)	BOOM (C1850A-8000)		
10	TUBE	C1850A-1210	C1850A-2210	1	
21	ROD	C1850A-1010	C1850A-2110	1	
31	COVER ROD	CR5030	CR5030	1	
32	O-RING	1BG50	1BG50	1	
33	O-RING	1BP44	1BP44	1	
34	DUST SEAL	LBI 30x38x5/6.5	LBI 30x38x5/6.5	1	
35	O-RING	1BP30	1BP30	1	
36	BACK UP RING	BRT3 30x40x2	BRT3 30x40x2	1	
37	U-PACKING	ISI 30x40x6	ISI 30x40x6	1	
38	DU BUSH	DU3020	DU3020	1	
40	NUT	CY-M20	CY-M20	1	M20
61	PISTON	PI5030-W	PI5030-W	1	
62	WEAR-RING	WRW 50x45x8	WRW 50x45x8	1	
63	U-PACKING	ODI 50x35x9	ODI 50x35x9	2	
64	O-RING	1BP18	1BP18	1	
	SEAL KIT (Include 32,33,34,35 36,37,63,64)	SEAL 5030	SEAL 5030		

HYDRAULIC PARTS

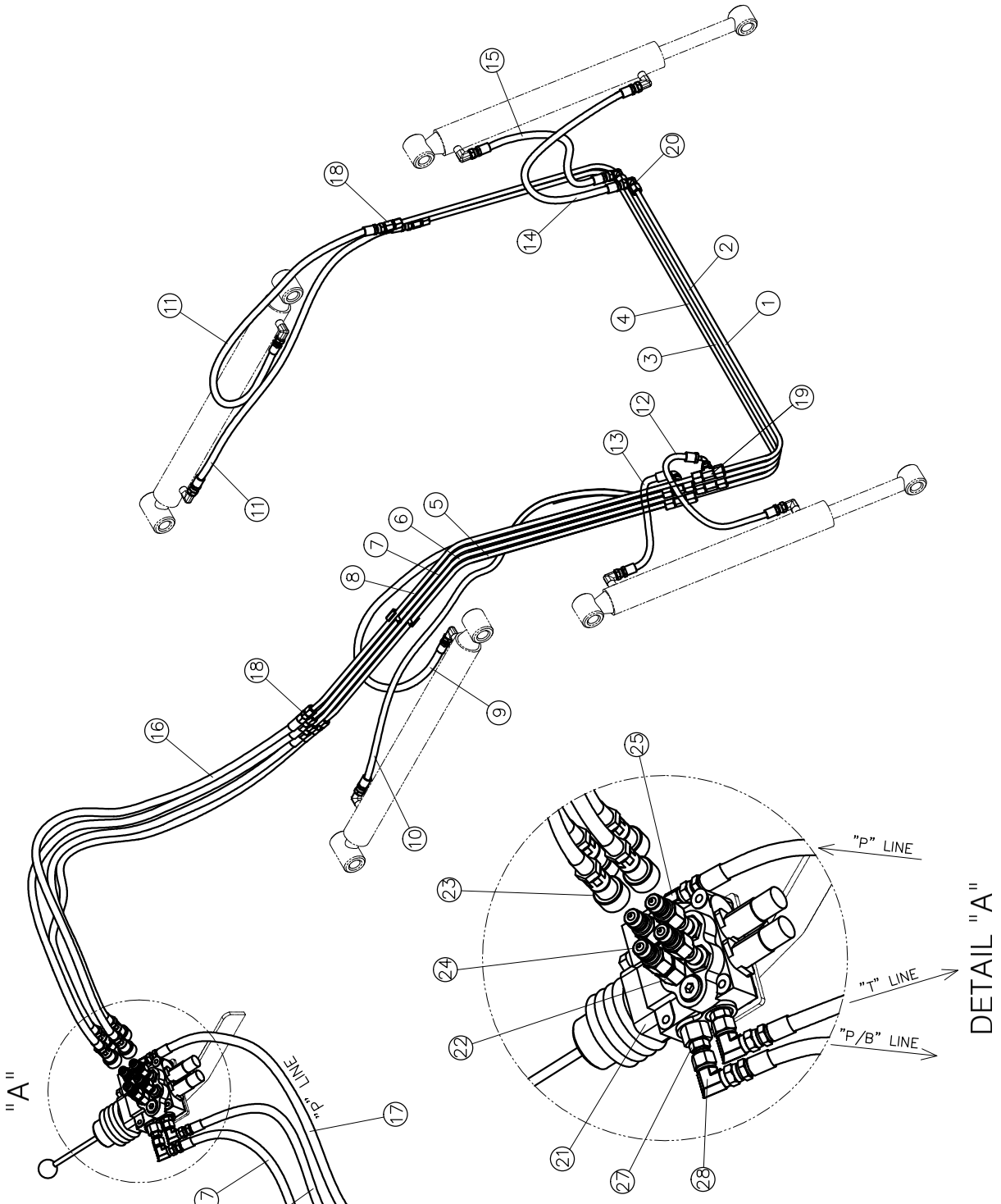

HYDRAULIC PARTS

NO.	PART NAME	PART NUMBER	Q'TY	REMARK
1	PIPE	C1850A-07-1100	1	
2	PIPE	C1850A-07-1200	1	
3	PIPE	C1850A-07-1300	1	
4	PIPE	C1850A-07-1400	1	
5	PIPE	C1850A-07-1500	1	
6	PIPE	C1850A-07-1600	1	
7	PIPE	C1850A-07-1700	1	
8	PIPE	C1850A-07-1800	1	
9	HOSE ASS'Y	5PG1-0300	1	BOOM, RH. UPPER
10	HOSE ASS'Y	5PG1-0760	1	BOOM, RH. LOWER
11	HOSE ASS'Y	5PG1-0060	2	BOOM, LH. UPPER / LOWER
12	HOSE ASS'Y	5PG1-0140	1	BUCKET, RH. LOWER
13	HOSE ASS'Y	5PG1-0050	1	BUCKET, RH. UPPER
14	HOSE ASS'Y	5PG1-0570	1	BUCKET, LH. LOWER
15	HOSE ASS'Y	5PG1-0480	1	BUCKET, LH. UPPER
16	HOSE ASS'Y	3P81-0850	4	BOOM → VALVE
17	HOSE ASS'Y	3P81-0770	3	"P/B", "T", "P" LINE
18	NIPPLE	ALK28-07-9800	6	
19	TEE NIPPLE	ALK28-07-9900	4	
20	ELBOW NIPPLE	ALK28-07-9600	2	
21	CONTROL VALVE	HDM03/2	1	BESKO VALVE
22	O-Ring NIPPLE	AL25-07-940B	4	VALVE "A", "B" PORT
23	Q-COUPLER(F)	ALK28-07-710A	4	
24	Q-COUPLER(M)	ALK28-07-720A	4	
25	O-Ring ELBOW	M7040-07-7050	1	VALVE "P" PORT
26	NIPPLE	TC40A-07-7010	3	TRACTOR "P/B", "P", "T" PORT
27	O-Ring NIPPLE	7860-07-7080	2	VALVE "P/B", "T" PORT
28	SWIVEL ELBOW NIPPLE	S1600G-07-0010	2	

DECAL & MANUAL

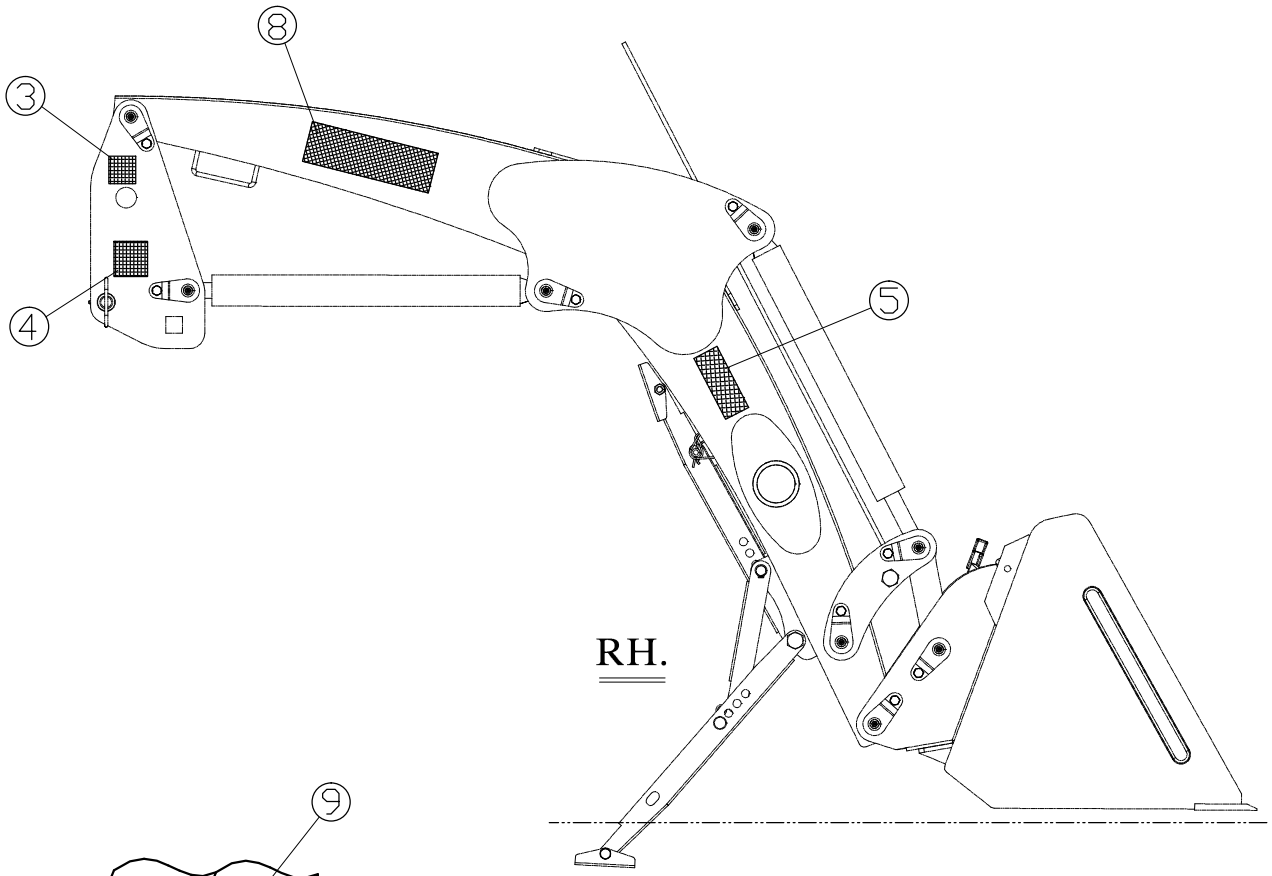

RH.

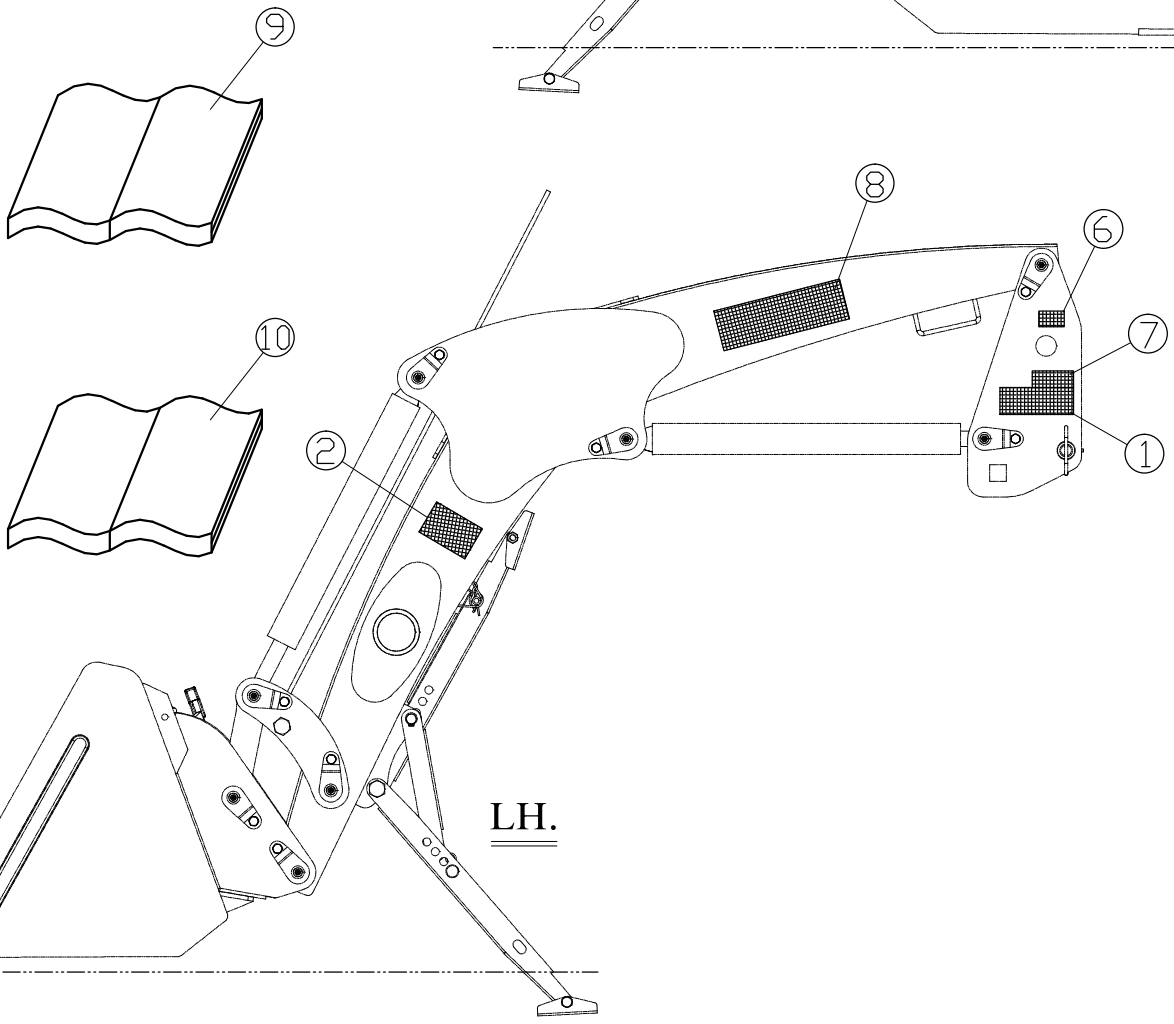

LH.

DECAL & MANUAL

NO.	PART NAME	PART NUMBER	Q'TY	REMARK
1	DECAL	03L01	1	
2	DECAL	03L02	1	
3	DECAL	03L03	1	
4	DECAL	03L04	1	
5	DECAL	03L04	1	
6	DECAL	03L06	1	
7	DECAL	03L00	1	
8	DECAL	13L04	2	"NTC40"
9	OPERATOR'S MANUAL	M03L01	1	
10	PARTS MANUAL	M13013	1	